LS8220,1,2,3,4,5,6,7,8,9DL,DLAB,BG,PN,RG,VN
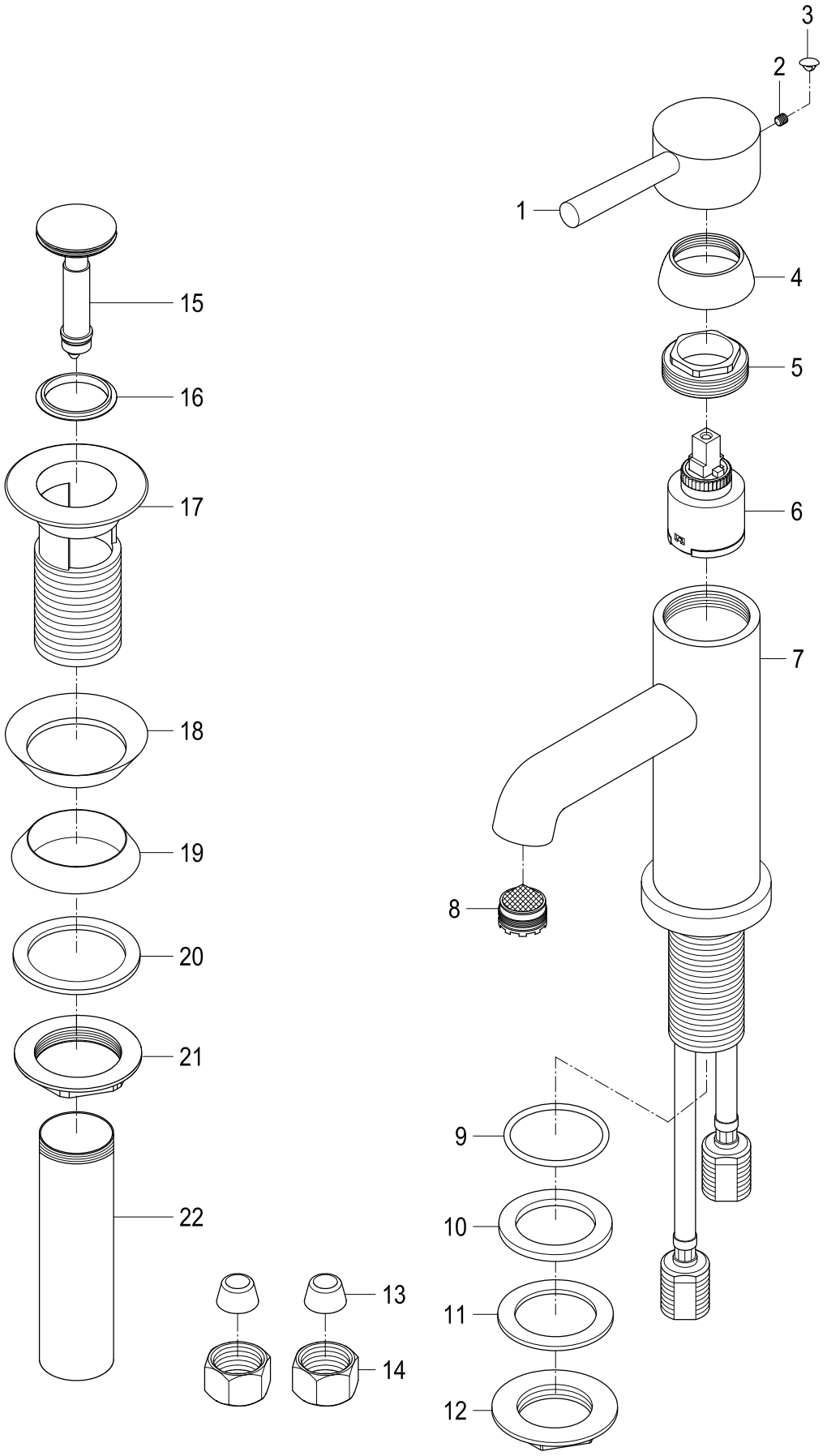
Single Handle Lavatory Faucet with Push-Up Pop-Up